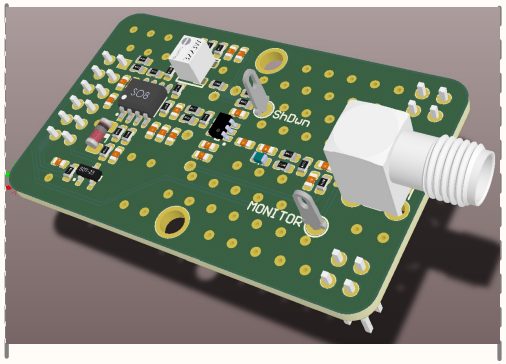

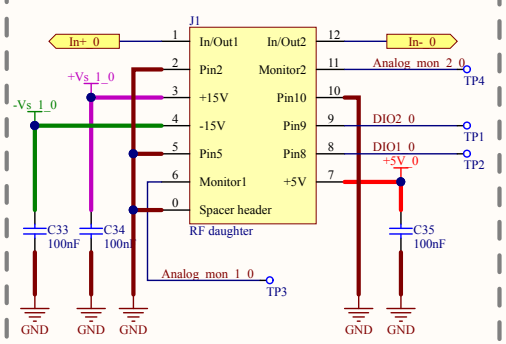

RF detector daughterboard

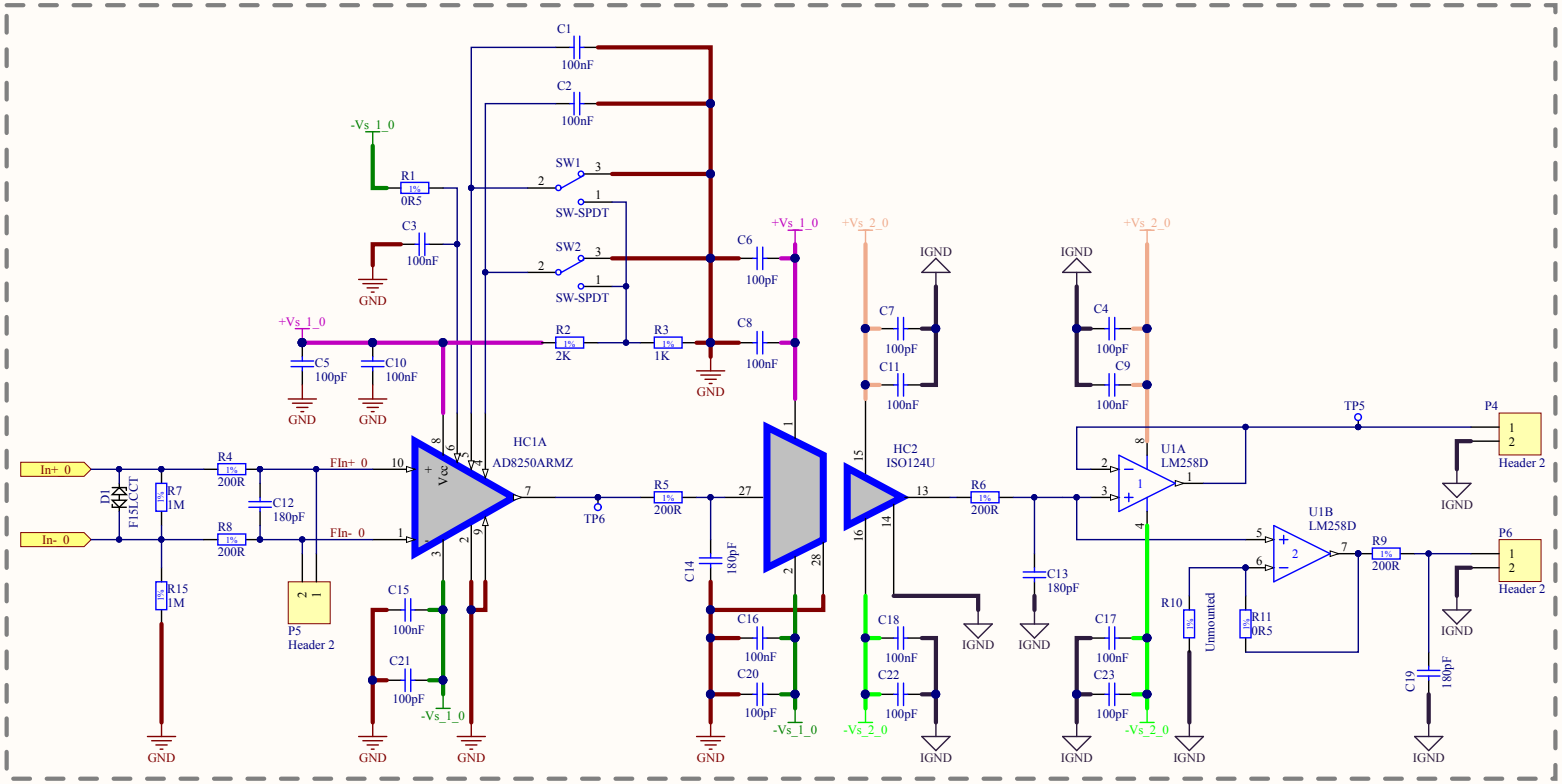

Analog signal conditioning motherboard

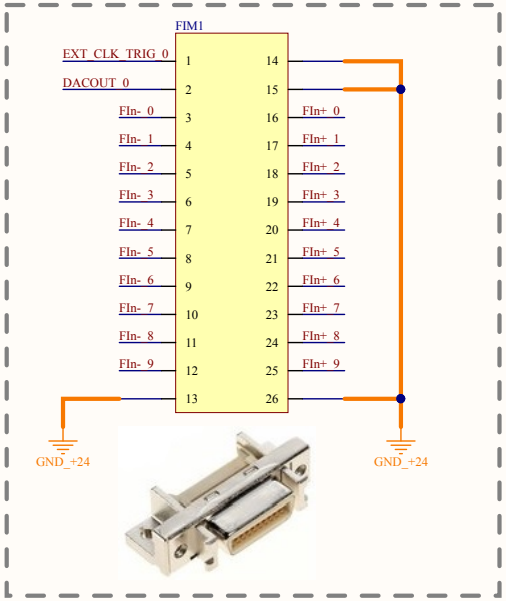

Mother board Fin connector

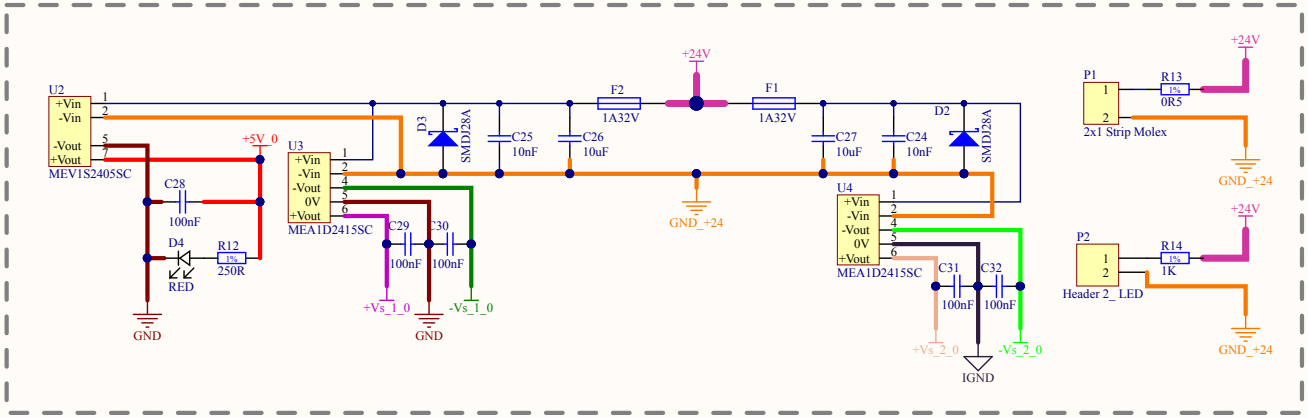

Mother board power

http://www.atomki.hu

This drawing contains proprietary information belonging to ATOMKI. Use or disclosure by written permission only.

Title: **Digital Filter Wall Board** **DFW v1.0 - [01] RF mother**			
Assembly varriant: **var: 01**		Description: **Release Candidate**	
Manufacturer: **ATOMKI** 18/c. Bem Square, Debrecen, H-4026		Pages: **01/01**	
Date: **2017.06.13.**	Drawn by: **Csaba Dósa**	Revision by: **Dr. József Molnár**	Revision: **Rev2**